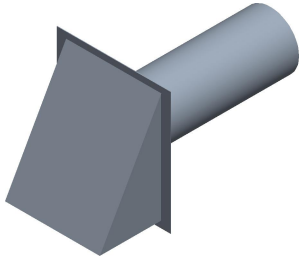

MATERIAL / COLOR	TYPES OF CATEGORIES & FAMCO PART NUMBER			
	TEXTURE	WITH DAMPER	WITH SCREEN	WITH DAMPER AND SCREEN
PL - PAINT LOCK	HORIZONTAL GRAIN	THDWV3PL	THSWV3PL	THSDWV3PL
WH - WHITE		THDWV3WH	THSWV3WH	THSDWV3WH
BR - BROWN		THDWV3BR	THSWV3BR	THSDWV3BR
BK - BLACK		THDWV3BK	THSWV3BK	THSDWV3BK
PL - PAINT LOCK	VERTICAL GRAIN	TVDWV3PL	TVSWV3PL	TVSDWV3PL
WH - WHITE		TVDWV3WH	TVSWV3WH	TVSDWV3WH
BR - BROWN		TVDWV3BR	TVSWV3BR	TVSDWV3BR
BK - BLACK		TVDWV3BK	TVSWV3BK	TVSDWV3BK

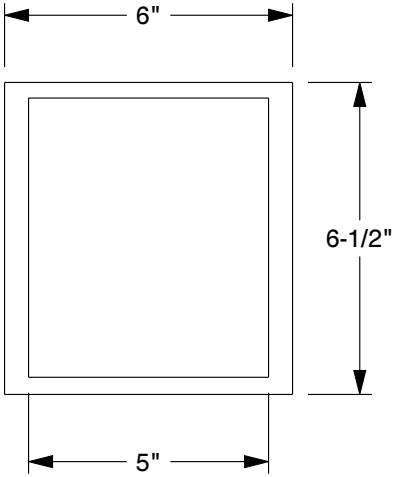

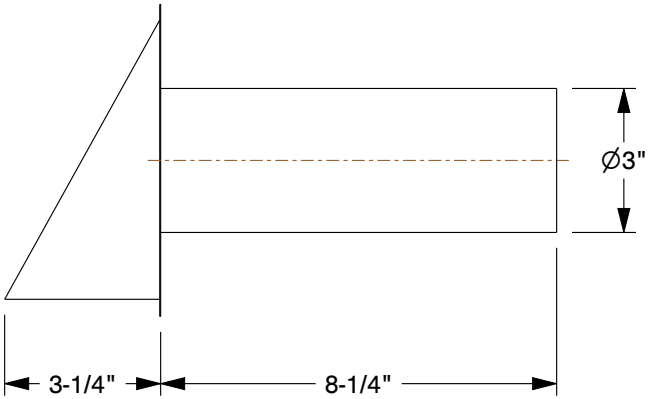

NOTES:

1. EMBOSSED WITH EITHER A VERTICAL OR HORIZONTAL WOOD GRAIN TEXTURE TO HELP THE VENT BLEND IN WITH WOOD GRAIN SIDING AND CLADDING.
2. OFFERED IN TWO MATERIALS: 26 GAUGE PAINT LOCK MATERIAL WHICH CAN BE PAINTED WITHOUT ETCHING, PRIMING OR PRE-TREATMENT AND 28 GAUGE PRE-PAINTED GALVANIZED STEEL.
3. AVAILABLE WITH STANDARD 8 1/4" LONG GALVANIZED STEEL TUBE, BUILT INTO FLANGE FOR WALL MOUNTED INSTALLATION.

FAMCO

5450 E Franklin Road
#104 Nampa
ID 83687, USA
Ph: 800-234-1903

This file and any associated information and specifications are provided for reference and evaluation purposes only, and is subject to change without notice. FAMCO makes no representations, warranties or guarantees as to the appropriateness, accuracy, completeness, or suitability for any purpose, of the file, information or specifications. You are solely responsible for the use of the file, information or specifications.

3" NEW TEXTURED WALL VENT

(Refer to the part number mentioned in the above table)

SCALE	NTS
UNIT	INCH
SHEET	1 of 1